Poly Practice

Beginner BLENDER

MODELING A BARREL IN 4 MINUTES

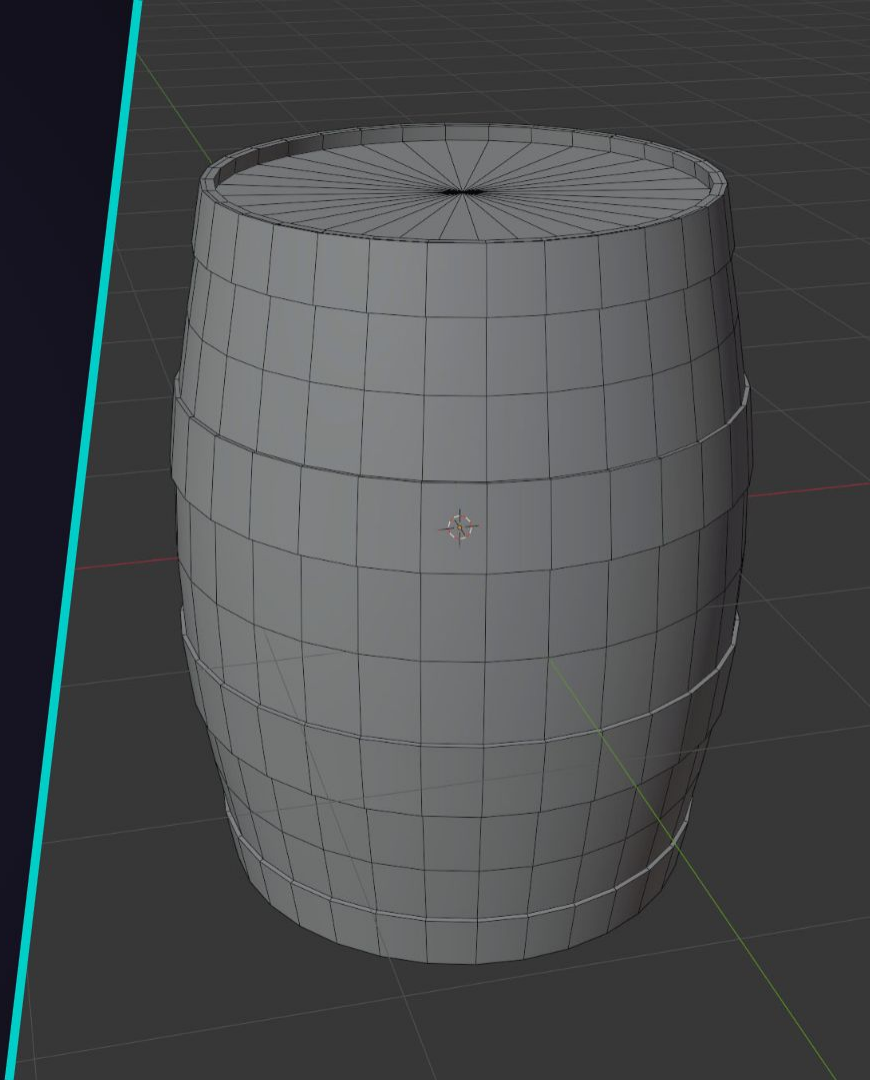

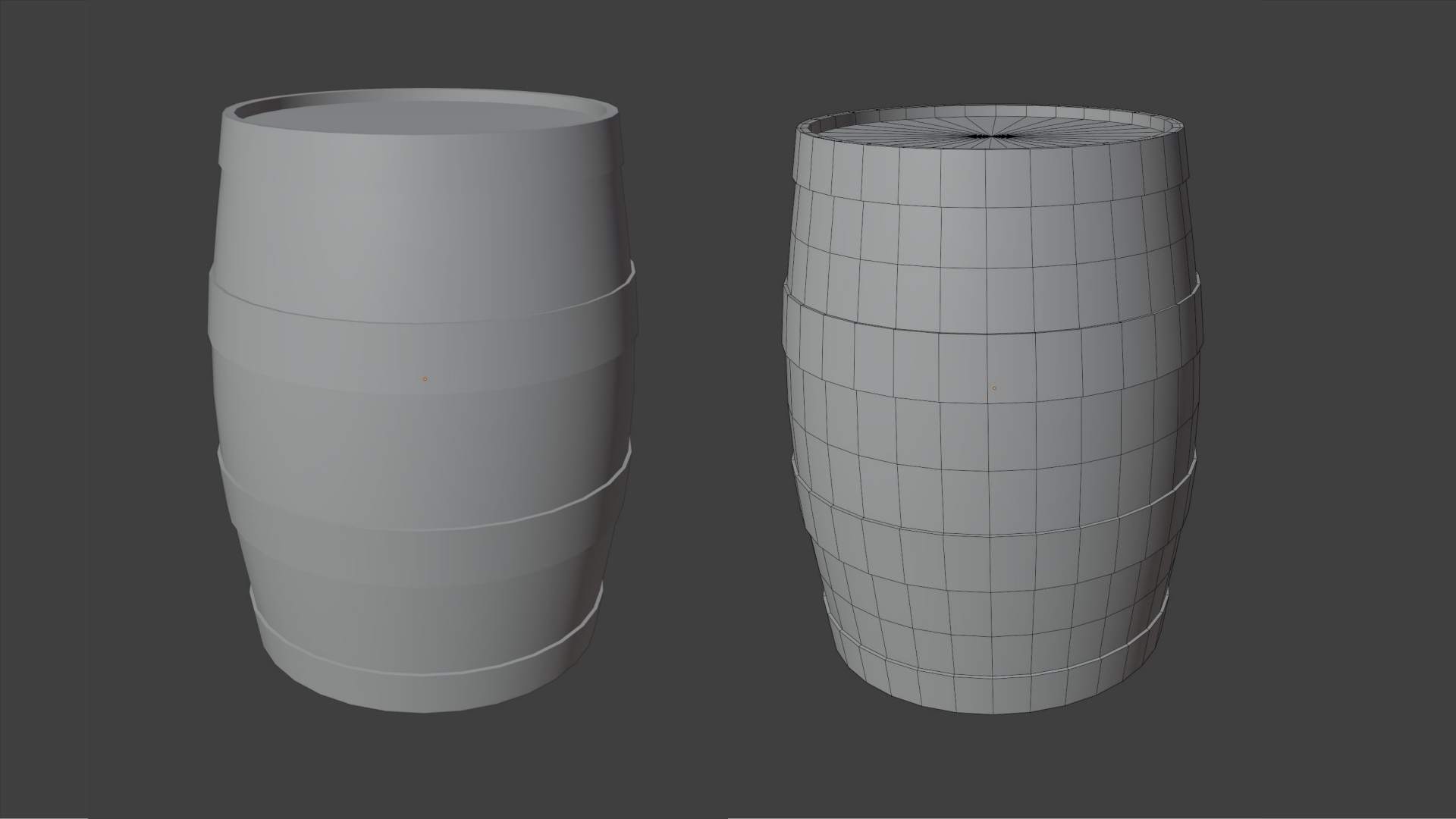

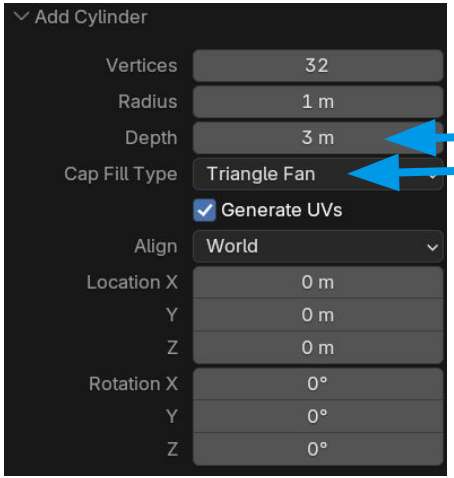

Make a new scene - General. Delete the cube.

Add a Cylinder (**Shift a**).

In the Cylinder options (bottom left) change the **Depth** to **3** and the **Cap Fill Type** to **Triangle Fan**.

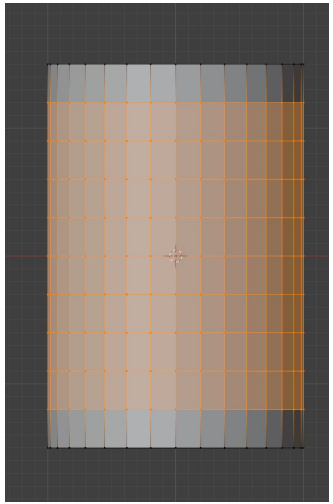

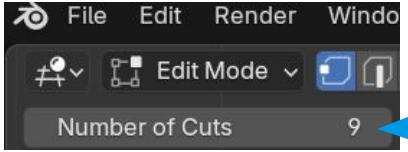

Go to your front view (**Numpad 1**).

With the cylinder selected enter Edit mode (**TAB**).

In the left menu choose the Loop Cut tool.

In the top left menu change the **Number of Cuts** to **9**.

Click on the Cylinder to make the cuts.

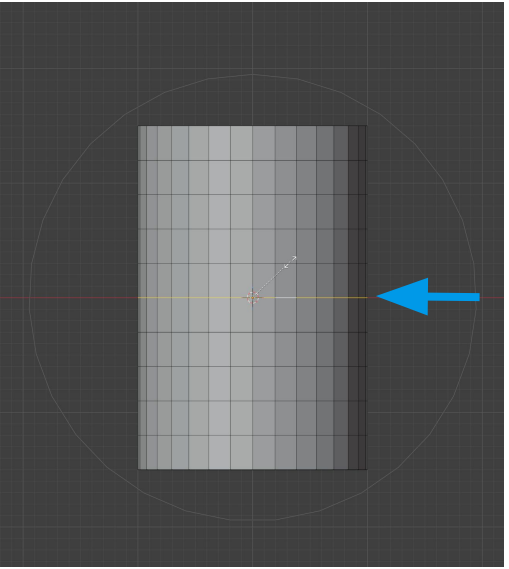

Press **w** to go to the selection tool. Switch to edge mode by pressing **2**.

ALT Left click a middle horizontal edge to select a loop.

Press **o** to turn on Proportional editing.

Press **s** to go to the scale tool.

Scroll down with your middle mouse button to increase the radius of the proportional editing falloff to encompass the entire cylinder as pictured here.

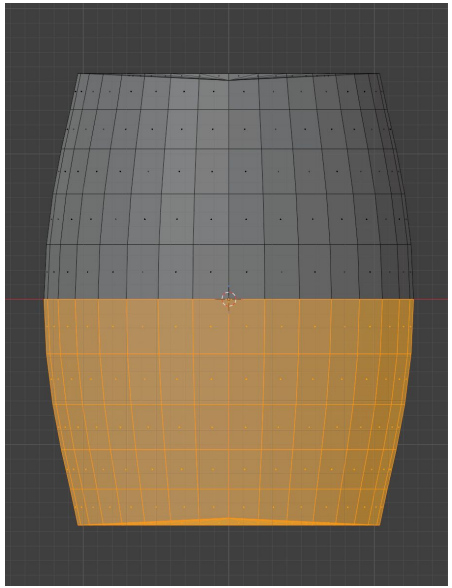

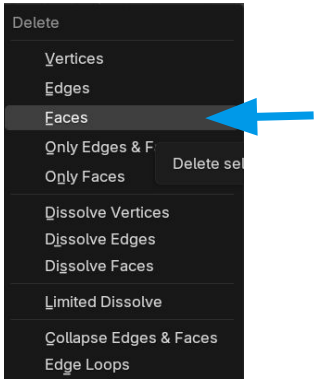

Drag with your mouse to scale, to finish left click.

Press **o** to turn off proportional editing.

Go to face mode by pressing **3**. Turn on xray mode **ALT z**.

Drag a marquee selection over half of the faces and press x to delete (*choose Faces*).

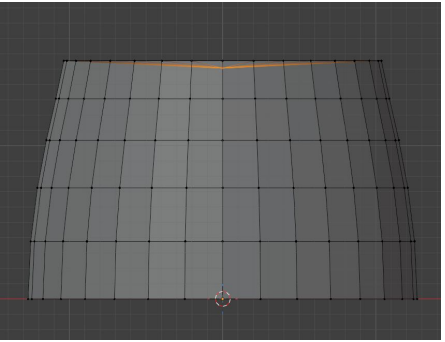

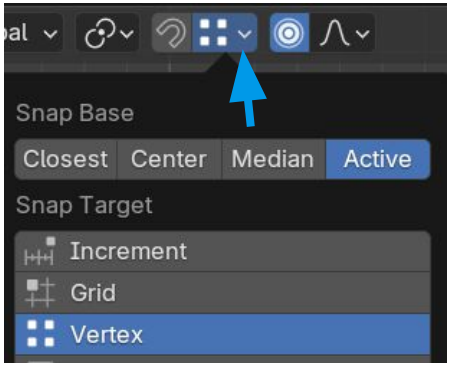

Switch to vertex mode (**1**). Select the top middle vertex that is down from the other top vertices.

In the top middle of the interface select the snapping options, change the **Snap Base** to **Active** and the **Snap Target** to **Vertex**.

Press **Shift Tab** to turn snapping on.

With the move tool (**Shift Spacebar**, select Move) drag on the blue arrow (the z-axis) over one of your top vertices to snap to it.

Press **Shift Tab** to turn snapping off.

Press **ALT z** to turn xray mode off.

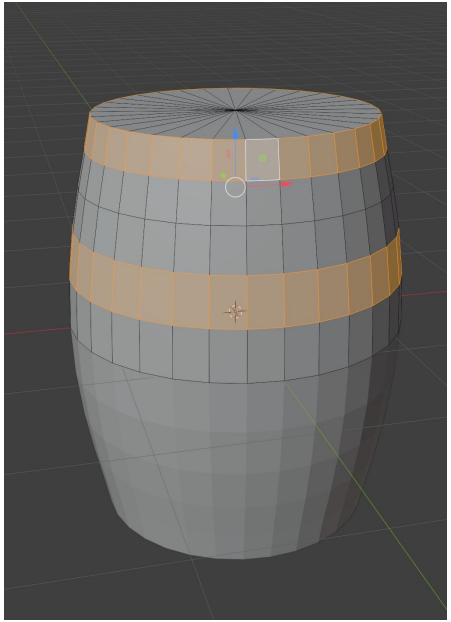

Over in the right side of the interface go to Modifiers. 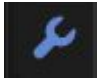

Click **Add Modifier** and type **m** and choose Mirror. Change the axis to **Z**.

Switch to face mode **3**. Alt click one of the top vertical edges to select a horizontal edge loop. Hold **shift** and Alt click the fourth down vertical edges to select another loop.

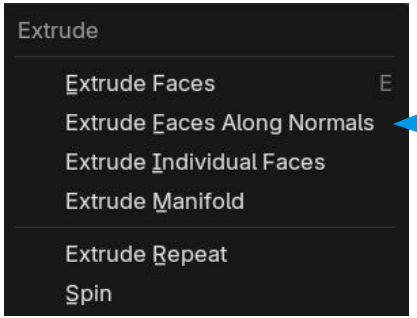

Press Alt e and choose **Extrude Faces Along Normals**.

In the bottom left change the Offset to **0.02m**.

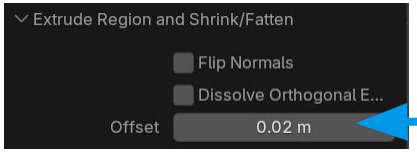

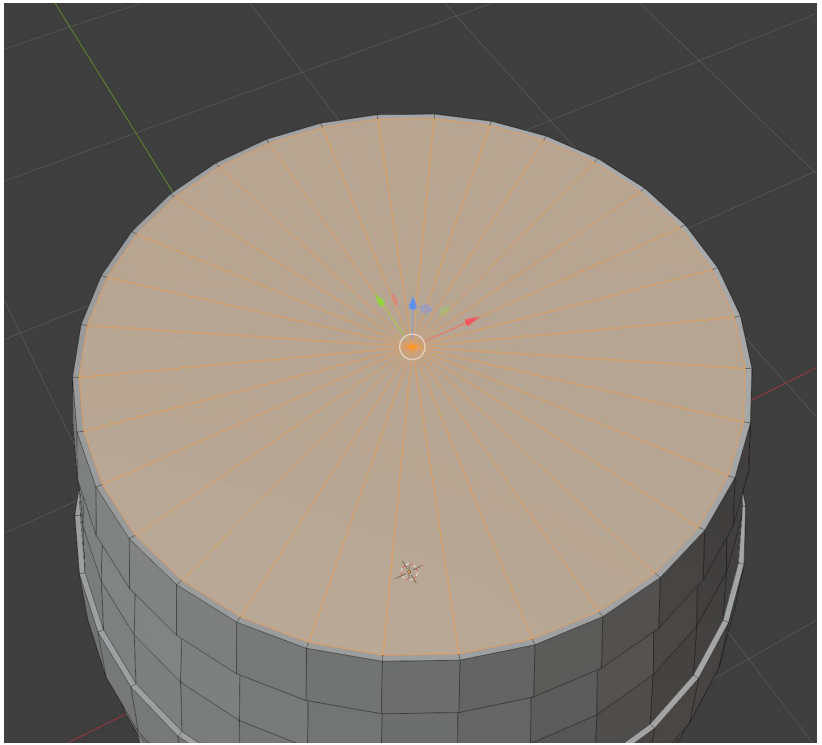

Select the top inner faces. Press **i** to inset the faces. I gave mine a Thickness of 0.03m.

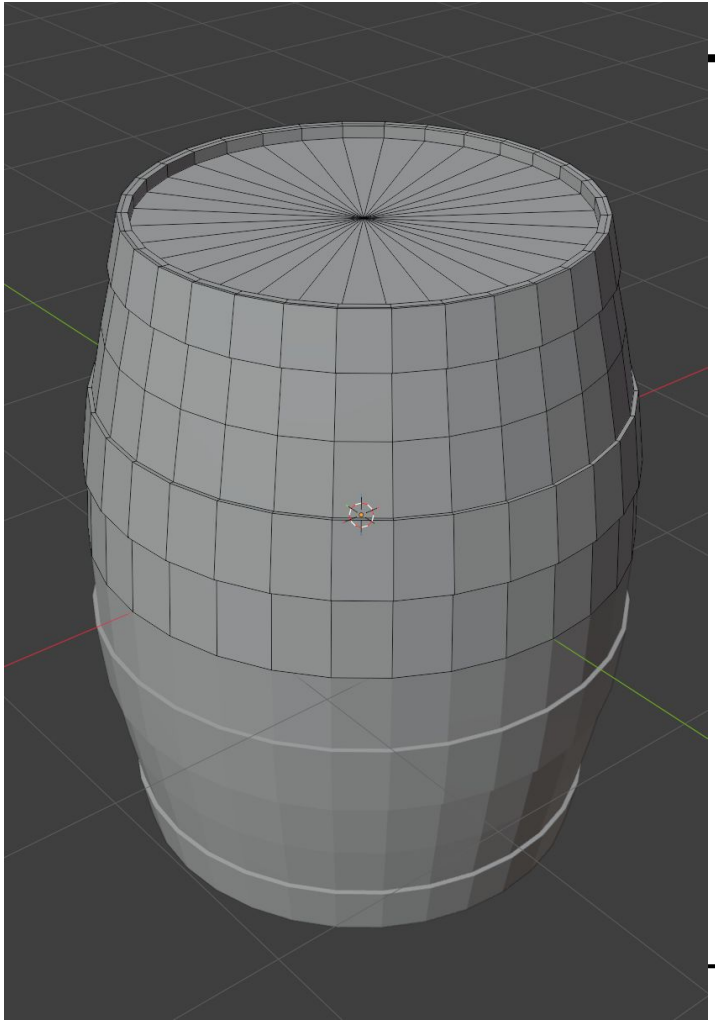

Press **e** then **z** to extrude on the z-axis. You might need to press **z** twice. Drag to create the extrusion.

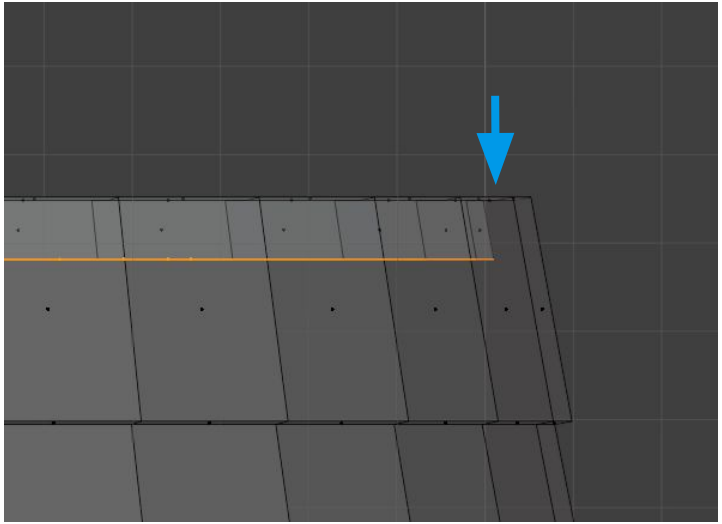

Press **Numpad 1** to go to the front view. Turn Xray mode on (**ALT z**).

Using scale (**s**)with **shift** pressed scale the faces so they line up with the angle on the rest of the model.

Turn Xray mode off (**ALT z**).

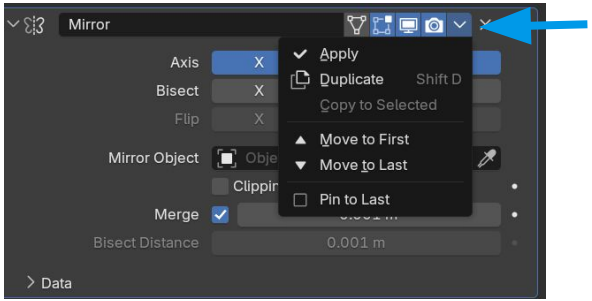

Return to object mode (**TAB**). Go to your modifiers and **Apply** the Mirror Modifier.

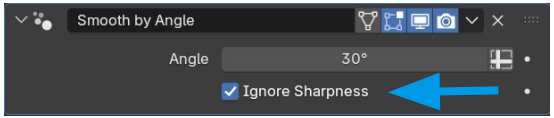

Click Add Modifier and type **s**. Choose **Smooth by Angle**.

Toggle on **Ignore Sharpness**.

That concludes the tutorial!